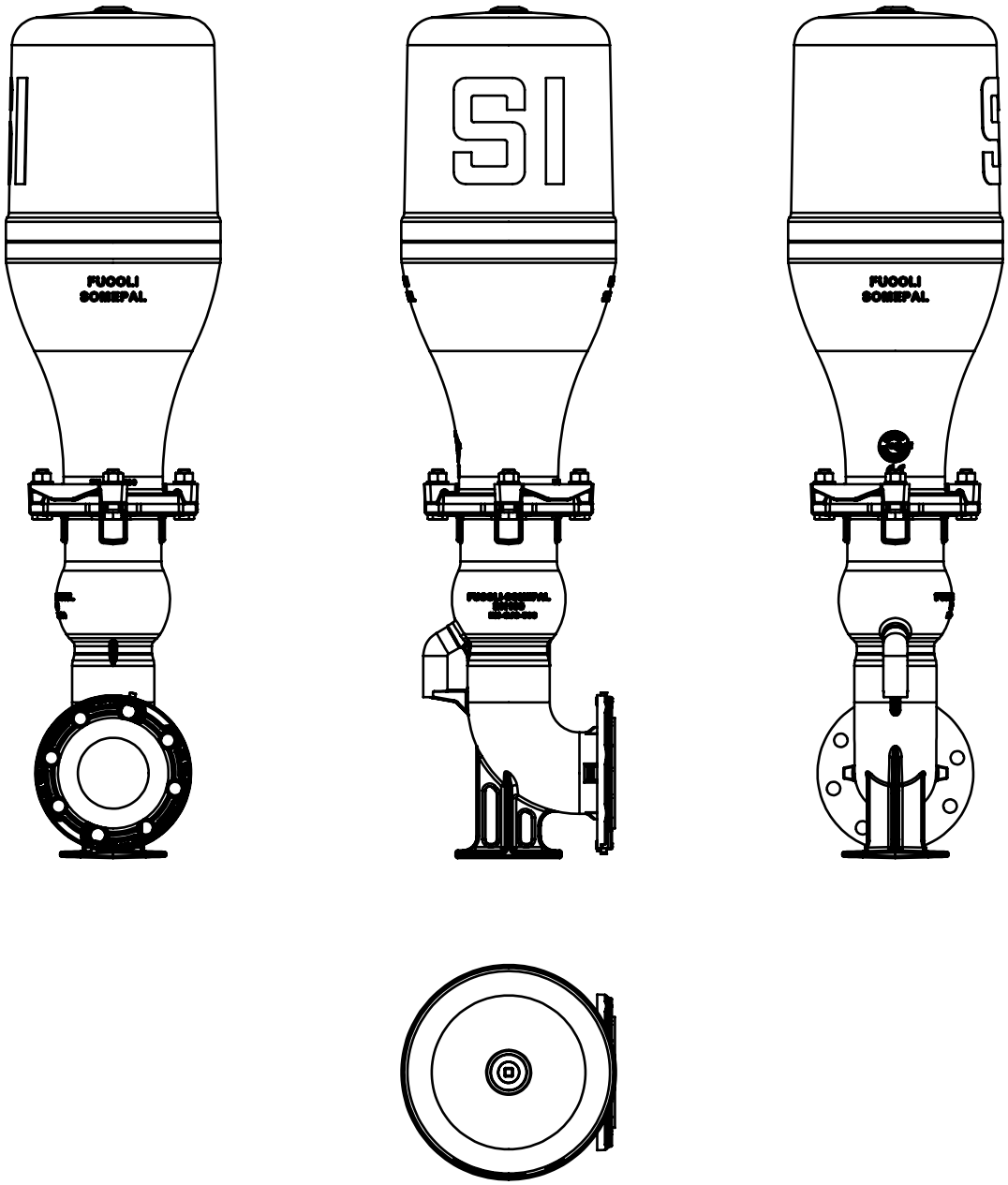

MARCO DE INCÊNDIO - MODELO SOMEPAL - 500MM - 110 - 75 - 52
FIRE HYDRANT - SERIES SOMEPAL - 550MM - 110 - 75 - 52
POTEAUX D'INCENDIE - MODÈLE SOMEPAL - 550MM - 110 - 75 - 52
HIDRANYE DE COLUMNA SECA - MODELO SOMEPAL - 550MM - 110 - 75 - 52
IDRANTI ANTINCENDIO - MODELLO SOMEPAL - 550MM - 110 - 75 - 52

DN	100
PFA (PN)	16
PMA (PN)	20
PEA (PN)	25

Fucoli Somepal

CAD

ref. 07.101

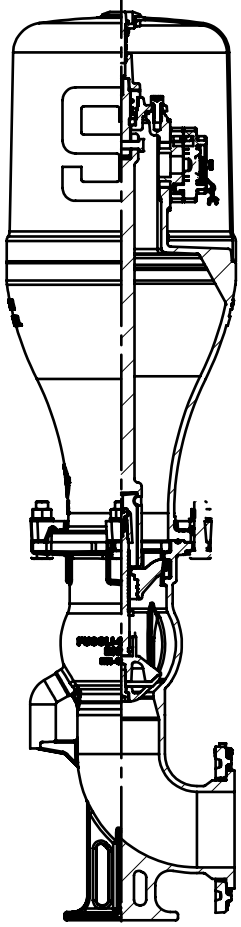

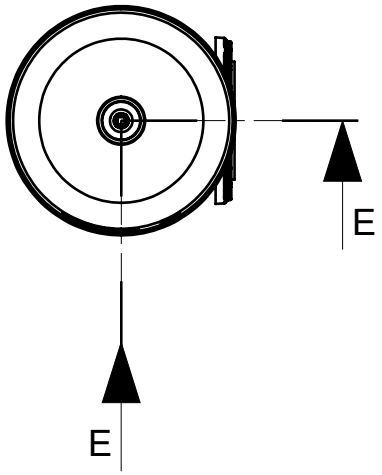

07.101-11209605-MI-Somepal-Curva-Incorporada-110-75-75.dwg

Ed.01 Rev. 1 - 05 / 2023

MARCO DE INCÊNDIO - MODELO SOMEPAL - 550MM - 110 - 75 - 75
FIRE HYDRANT - SERIES SOMEPAL - 550MM - 110 - 75 - 75
POTEAUX D'INCENDIE - MODÈLE SOMEPAL - 550MM - 110 - 75 - 75
HIDRANYE DE COLUMNA SECA - MODELO SOMEPAL - 550MM - 110 - 75 - 75
IDRANTI ANTINCENDIO - MODELLO SOMEPAL - 550MM - 110 - 75 - 75

DN	100
PFA (PN)	16
PMA (PN)	20
PEA (PN)	25